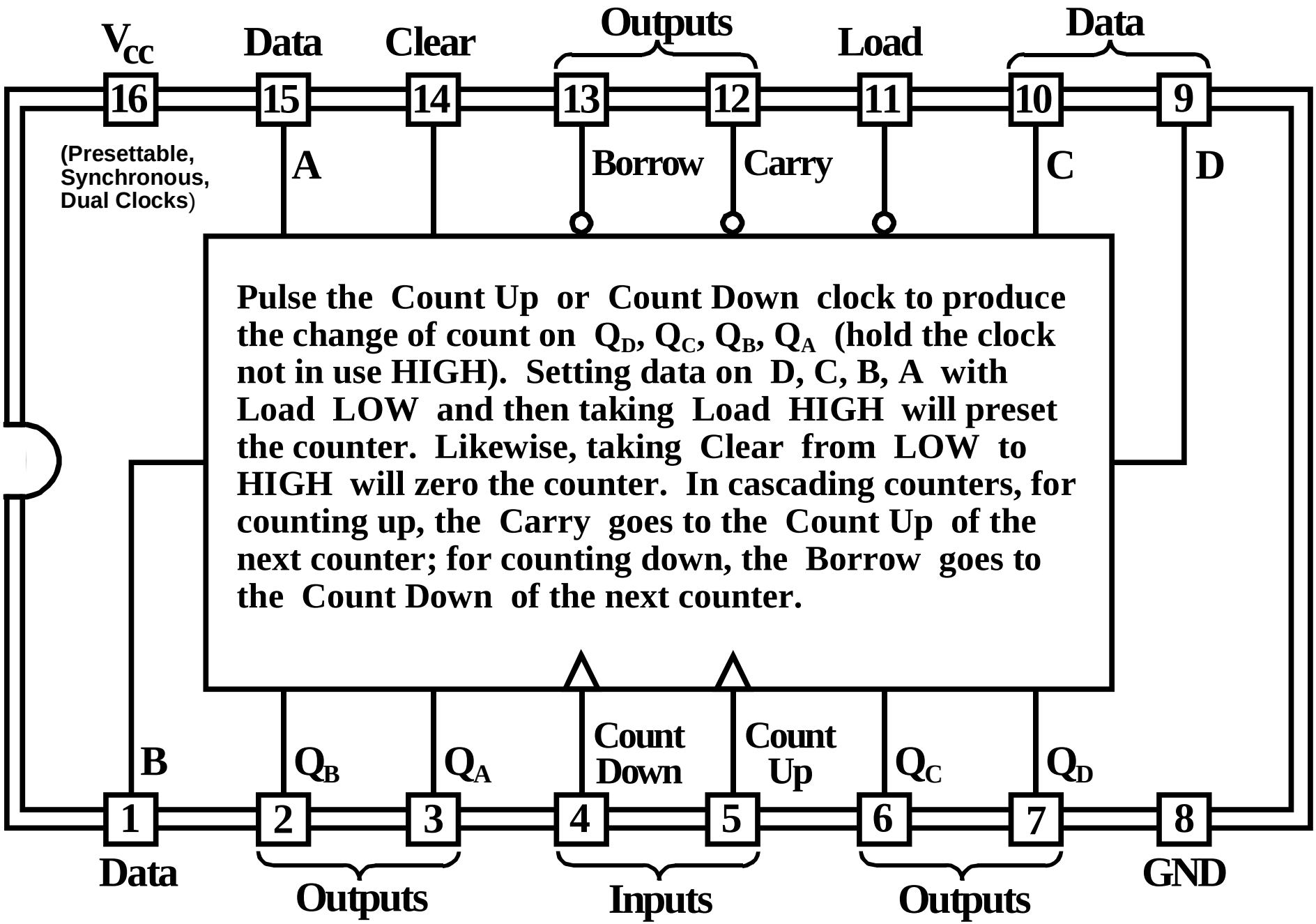

74193: 4-BIT BINARY UP/DOWN COUNTER